faital PRO PROFESSIONAL LOUDSPEAKERS

4FE35

4" - 30 W - 91 dB - 8 Ohm



NOMINAL SPECIFICATIONS

Nominal Diameter	100 mm (4 in)
Overall Diameter	129.85/100.5 mm (5.11/3.96 in)
Bolt Circle Diameter	115.26 mm (4.54 in)
Baffle Cutout Diameter	91.5 mm (3.60 in)
Depth	58.3 mm (2.30 in)
Flange and Gasket Thickness	7.2 mm (0.28 in)
Net Weight	**570 g (1.3 lb)**
Shipping Box (Single Carton Box - 8 units)	225 x 225 x 150 mm (8.9 x 8.9 x 5.9 in)
Shipping Weight (8 units)	5 kg (11.0 lb)

PART NUMBER

Faston Terminals - 8 Ohm Version	01004086

NOTES:

Packaged and sold in multiples of 8 units

(1) 2 Hours Test According to AES 2-1984 Rev. 2003

(2) Maximum power is defined as 3dB greater than nominal power.

(3) NBR (Rubber)

(4) Xmax= [(winding depth - magnetic gap depth)/2] + (magnetic gap depth/3)

(5) Maximum excursion before permanent damage

TECHNICAL PARAMETERS

Nominal Impedance	8 Ohm
Minimum Impedance	7.2 Ohm
AES Power Handling **(1)**	30 W
Maximum Power Handling (2)	**60 W**
Sensitivity (1W/1m)	**91 dB**
Frequency Range	90÷20000 Hz
Voice Coil Diameter	**19 mm (0.75 in)**
Winding Material	Al
Former Material	Kapton
Winding Depth	6.8 mm (0.27 in)
Magnetic Gap Depth	**4 mm (0.16 in)**
Flux Density	1.1 T
Magnet	Ferrite Ring
Basket Material	Steel
Demodulation	Copper Cap
Cone Surround **(3)**	Half Roll
NET Air Volume filled by Loudspeaker	0.150 dm^3 (0.005 ft^3)
Spider Profile	1x constant height waves

THIELE & SMALL PARAMETERS

Fs	100 Hz
Re	6.5 Ohm
Qes	1.04
Qms	4.2
Qts	0.83
Vas	2.4 dm^3 (0.07 ft^3)
Sd	51.9 cm^2 (8.04 in^2)
Xmax **(4)**	2.73 mm
Xdamage **(5)**	6.8 mm
Mms	3.9 g
Bl	3.9 N/A
Le	0.1 mH
Mmd	3.5 g
Cms	0.65 mm/N
Rms	0.6 kg/s
Eta Zero	0.23 %
EBP	96 Hz

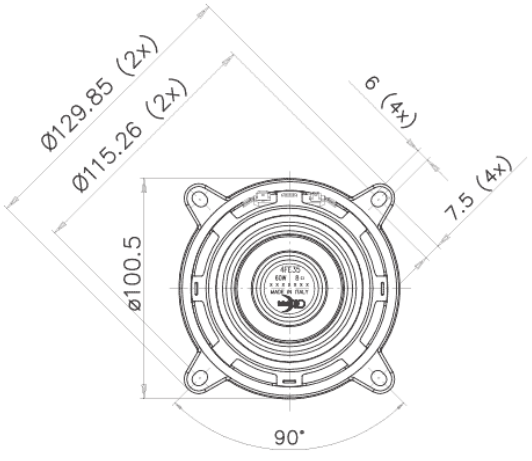

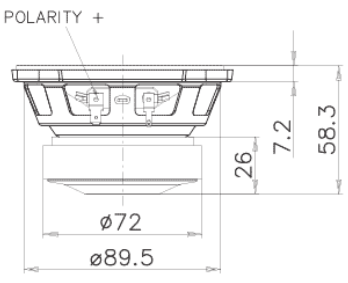

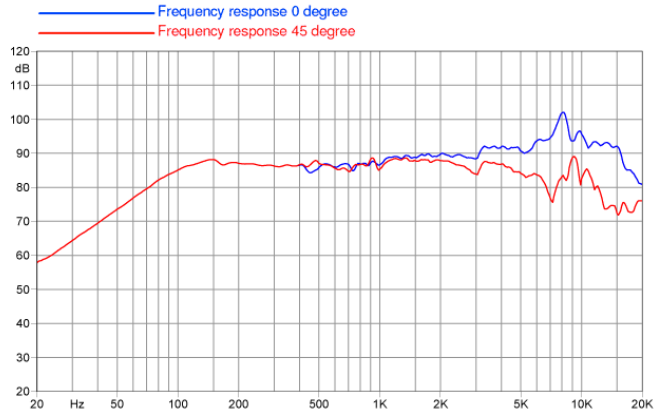

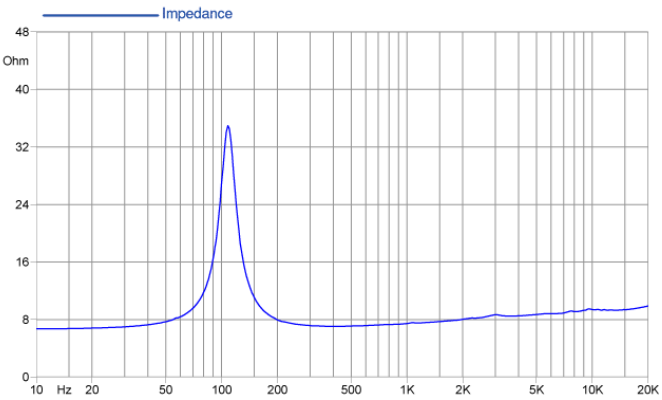

©Copyright 2026 **Faital S.p.A.** • All rights reserved.